Work Order ID 69487

Wednesday, May 11, 2011 12:56:16 PM

Item ID: D4030-041 **Accept** **Setup Start**

Revision ID: **Stop**

Item Name: Long Basket Assembly (350)

Start Date: 5/11/2011 **Start Qty:** 1.00 **Cust Item ID:**

Required Date: 5/13/2011 **Req'd Qty:** 1.00 **Customer:**

Reference:

Approvals: **Process Plan:** R **Date:** 11-05-11 **Tooling:** **Date:** **Run Start**

QC: **Date:** **SPC (Y/N):** **Date:** **Stop**

Sequence ID/ Work Center ID	Operation Description	Set Up/ Run Hours	Tool ID	Tool #	Plan Code	Accept Qty	Reject Qty	Reject Number	Insp. Stamp
Draw Nbr	**Revision Nbr**								
D4030	C								
100	Pick Kit	0.00							
Packaging	**Memo**	0.00				11/6/7	SP		
Packaging									
110	Assemble as per dwg	0.00							
HandFinish	**Memo**	0.00				EJ 11/06/08	D		
Hand Finishing									
120	QC5- Inspect part completeness to step on W/O	0.00							
QC	**Memo**	0.00	S 11/06/08			(K)			
Quality Control									

Dart Aerospace Ltd

W/O:		WORK ORDER CHANGES					
DATE	STEP	PROCEDURE CHANGE	By	Date	Qty	Approval Chief Eng / Prod Mgr	Approval QC Inspector

Part No: _____ **PAR #:** _____ **Fault Category:** _____ **NCR:** Yes No **DQA:** _____ **Date:** _____

Resolution: _____ **Disposition:** _____ **QA: N/C Closed:** _____ **Date:** _____

NCR:		WORK ORDER NON-CONFORMANCE (NCR)						
DATE	STEP	Description of NC Section A	Corrective Action Section B			Verification Section C	Approval Chief Eng	Approval QC Inspector
			Initial Chief Eng	Action Description Chief Eng	Sign & Date			

NOTE: Date & initial all entries

Work Order ID 69487

Wednesday, May 11, 2011 12:56:16 PM

Item ID: D4030-041 **Accept** **Setup Start**

Revision ID: **Stop**

Item Name: Long Basket Assembly (350)

Start Date: 5/11/2011 **Start Qty:** 1.00 **Cust Item ID:**

Required Date: 5/13/2011 **Req'd Qty:** 1.00 **Customer:**

Reference:

Approvals: **Process Plan:** _____ **Date:** _____ **Tooling:** _____ **Date:** _____ **Run Start**

QC: _____ **Date:** _____ **SPC (Y/N):** _____ **Date:** _____ **Stop**

Sequence ID/ Work Center ID	Operation Description	Set Up/ Run Hours	Tool ID	Tool #	Plan Code	Accept Qty	Reject Qty	Reject Number	Insp. Stamp
130	Identify as per dwg & Stock Location:_____	0.00	PR 69481				11/6/85		
Packaging	Memo	0.00							
Packaging									
140	QC21- Final Inspection - Work Order Release	0.00					11/6/9		
QC	Memo	0.00							
Quality Control									

MF
11-06-09

Dart Aerospace Ltd

W/O:		WORK ORDER CHANGES					
DATE	STEP	PROCEDURE CHANGE	By	Date	Qty	Approval Chief Eng / Prod Mgr	Approval QC Inspector

Part No: _____ **PAR #:** _____ **Fault Category:** _____ **NCR:** Yes No **DQA:** _____ **Date:** _____

Resolution: _____ **Disposition:** _____ **QA: N/C Closed:** _____ **Date:** _____

NCR:		WORK ORDER NON-CONFORMANCE (NCR)						
DATE	STEP	Description of NC Section A	Corrective Action Section B			Verification Section C	Approval Chief Eng	Approval QC Inspector
			Initial Chief Eng	Action Description Chief Eng	Sign & Date			

NOTE: Date & initial all entries

Picklist Print

Wednesday, May 11, 2011 12:56:23 PM

Work Order ID: 69487

Parent Item: D4030-041

Parent Item Name: Long Basket Assembly (350)

Start Date: 5/11/2011 **Required Date:** 5/13/2011

Start Qty: 1.00 **Required Qty:** 1.00

Comments: IPP Rev:A new issue DD 10.03.23 verified by:EC IPP Rev:B as per dwg revB DD 10.04.20 verified by:EC IPP Rev:C as per dwg revC DD 10.08.18 verified by:EC

Component Item ID/ Item Name	Replacement Item ID	Mfg/ Purch	Bin Item	Primary Location	Last Location	Route Seq ID	Unit of Measure	Qty on Hand	Qty per Kit	Total Qty	Qty Issued	Date Issued	Status
D2530 Handle Weldment		Manufactured	No			100	Each	8.0000	1	1 B69907			
				Location		**Loc Qty**		**Loc Code**					
				ST506		8							
					66563	2							
					68363	6							
D2535 Spring		Manufactured	No			100	Each	41.0000	2	2			
				Location		**Loc Qty**		**Loc Code**					
				ST504		41							
					66764	41				2			
D2537 Bushing		Manufactured	No			100	Each	32.0000	2	2			
				Location		**Loc Qty**		**Loc Code**					
				ST504		32							
					66972	32				2			
D3913-041 Long Basket Base Assemby, 350		Manufactured	No			100	Each	0.0000	1	1 B69493		11/06/08	
D3914-041 Long Basket Lid Assembly (350)		Manufactured	No			100	Each	0.0000	1	1 B69489		11/06/08	

Dart Aerospace Ltd

W/O:		WORK ORDER CHANGES					
DATE	STEP	PROCEDURE CHANGE	By	Date	Qty	Approval Chief Eng / Prod Mgr	Approval QC Inspector

Part No: _____ **PAR #:** _____ **Fault Category:** _____ **NCR:** Yes No **DQA:** _____ **Date:** _____

Resolution: _____ **Disposition:** _____ **QA: N/C Closed:** _____ **Date:** _____

NCR:		WORK ORDER NON-CONFORMANCE (NCR)						
DATE	STEP	Description of NC Section A	Corrective Action Section B			Verification Section C	Approval Chief Eng	Approval QC Inspector
			Initial Chief Eng	Action Description Chief Eng	Sign & Date			

NOTE: Date & initial all entries

Picklist Print

Wednesday, May 11, 2011 12:56:23 PM

Work Order ID: 69487

Parent Item: D4030-041

Parent Item Name: Long Basket Assembly (350)

Start Date: 5/11/2011 **Required Date:** 5/13/2011

Start Qty: 1.00 **Required Qty:** 1.00

D3917-3 Washer	Manufactured	No	100	Each	0.0000	6	6	B69513
D3953-3 Gas Spring Stud, Lid	Manufactured	No	100	Each	3.0000	2	2	B69611

Location	Loc Qty	Loc Code
ST096	3	
68230	3	

D3953-7 Spring Spacer	Manufactured	No	100	Each	20.0000	2	2	

Location	Loc Qty	Loc Code
ST096	20	
65053	4	
68464	16	2

D3953-9 Gas Spring Washer	Manufactured	No	100	Each	2.0000	2	2	B69973

Location	Loc Qty	Loc Code
ST096	2	
68231	2	

D3953-17 Gas Spring Spacer	Manufactured	No	100	Each	9.0000	2	2	B69603 10/6/7

Location	Loc Qty	Loc Code
ST096	9	
67968	9	

Dart Aerospace Ltd

W/O:		WORK ORDER CHANGES					
DATE	STEP	PROCEDURE CHANGE	By	Date	Qty	Approval Chief Eng / Prod Mgr	Approval QC Inspector

Part No: _____ **PAR #:** _____ **Fault Category:** _____ **NCR:** Yes No **DQA:** _____ **Date:** _____

Resolution: _____ **Disposition:** _____ **QA: N/C Closed:** _____ **Date:** _____

NCR:		WORK ORDER NON-CONFORMANCE (NCR)						
DATE	STEP	Description of NC Section A	Corrective Action Section B			Verification Section C	Approval Chief Eng	Approval QC Inspector
			Initial Chief Eng	Action Description Chief Eng	Sign & Date			

NOTE: Date & initial all entries

Picklist Print

Wednesday, May 11, 2011 12:56:24 PM

Work Order ID: 69487

Parent Item: D4030-041

Parent Item Name: Long Basket Assembly (350)

Start Date: 5/11/2011 **Required Date:** 5/13/2011

Start Qty: 1.00 **Required Qty:** 1.00

D3953-19	Manufactured	No	100	Each	20.0000	1	1	
Gas Spring Bracket								

Location	Loc Qty	Loc Code
ST096	20	
59213	1	
68462	19	

D3953-21	Manufactured	No	100	Each	19.0000	1	1	
Gas Spring Bracket								

Location	Loc Qty	Loc Code
ST096	19	
68463	19	

D3969-3	Manufactured	No	100	Each	20.0000	1	1	
Spring (Basket Lid)								

Location	Loc Qty	Loc Code
ST272	20	
64285	1	
68925	19	

AN3-14A	Purchased	No	100	Each	21.0000	4	4	11/6/7
Bolt								

Location	Loc Qty	Loc Code
ST351	21	
117513	21	

Dart Aerospace Ltd

W/O:		WORK ORDER CHANGES					
DATE	STEP	PROCEDURE CHANGE	By	Date	Qty	Approval Chief Eng / Prod Mgr	Approval QC Inspector

Part No: _____ **PAR #:** _____ **Fault Category:** _____ **NCR:** Yes No **DQA:** _____ **Date:** _____

Resolution: _____ **Disposition:** _____ **QA: N/C Closed:** _____ **Date:** _____

NCR:		WORK ORDER NON-CONFORMANCE (NCR)						
DATE	STEP	Description of NC Section A	Corrective Action Section B			Verification Section C	Approval Chief Eng	Approval QC Inspector
			Initial Chief Eng	Action Description Chief Eng	Sign & Date			

NOTE: Date & initial all entries

Picklist Print

Wednesday, May 11, 2011 12:56:24 PM

Work Order ID: 69487

Parent Item: D4030-041

Parent Item Name: Long Basket Assembly (350)

Start Date: 5/11/2011 **Required Date:** 5/13/2011

Start Qty: 1.00 **Required Qty:** 1.00

AN3-16A Bolt	Purchased	No	100	Each	151.0000	2	2	5P

Location	Loc Qty	Loc Code	
ST352	151		
114752	1		
~~116419~~	50		2
117441	100		

AN5-17A Bolt	Purchased	No	100	Each	112.0000	4	4	5P

Location	Loc Qty	Loc Code	
ST339	112		
~~116590~~	32		4
117313	30		
117619	50		

AN4-12 Bolt	Purchased	No	100	Each	74.0000	3	3	5P

Location	Loc Qty	Loc Code	
ST357	74		
116786	14		3
~~117514~~	60		

AN310-4 NUT	Purchased	No	100	Each	26.0000	3	3	M117795SP 1,1,6,7

Location	Loc Qty	Loc Code	
ST324	26		
117442	26		

Dart Aerospace Ltd

W/O:		WORK ORDER CHANGES					
DATE	STEP	PROCEDURE CHANGE	By	Date	Qty	Approval Chief Eng / Prod Mgr	Approval QC Inspector

Part No: _____ **PAR #:** _____ **Fault Category:** _____ **NCR:** Yes No **DQA:** _____ **Date:** _____

Resolution: _____ **Disposition:** _____ **QA: N/C Closed:** _____ **Date:** _____

NCR:		WORK ORDER NON-CONFORMANCE (NCR)						
DATE	STEP	Description of NC Section A	Corrective Action Section B			Verification Section C	Approval Chief Eng	Approval QC Inspector
			Initial Chief Eng	Action Description Chief Eng	Sign & Date			

NOTE: Date & initial all entries

Picklist Print

Wednesday, May 11, 2011 12:56:25 PM

Work Order ID: 69487

Parent Item: D4030-041

Parent Item Name: Long Basket Assembly (350)

Start Date: 5/11/2011 **Required Date:** 5/13/2011

Start Qty: 1.00 **Required Qty:** 1.00

AN310C4	Purchased	No	100	Each	59.0000	2	2	
Nut								

Location	Loc Qty	Loc Code
ST324	59	
~~116741~~	10	
117395	49	

MS21042L3	Purchased	No	100	Each	2,328.000	6	6	
Nut								

Location	Loc Qty	Loc Code
ST300	2328	
116391	11	
116540	351	
116549	766	
~~117441~~	800	
117601	400	

MS21042L5	Purchased	No	100	Each	1,283.000	4	4	
Nut								

Location	Loc Qty	Loc Code
ST300	1283	
116105	323	
~~116548~~	260	
117441	500	
117591	100	
117611	100	

Dart Aerospace Ltd

W/O:		WORK ORDER CHANGES					
DATE	STEP	PROCEDURE CHANGE	By	Date	Qty	Approval Chief Eng / Prod Mgr	Approval QC Inspector

Part No: _____ **PAR #:** _____ **Fault Category:** _____ **NCR:** Yes No **DQA:** _____ **Date:** _____

Resolution: _____ **Disposition:** _____ **QA: N/C Closed:** _____ **Date:** _____

NCR:		WORK ORDER NON-CONFORMANCE (NCR)						
DATE	STEP	Description of NC Section A	Corrective Action Section B			Verification Section C	Approval Chief Eng	Approval QC Inspector
			Initial Chief Eng	Action Description Chief Eng	Sign & Date			

NOTE: Date & initial all entries

H:\fFORMS\Quality Assurance\approved QA\NCRWO RevE

Picklist Print

Wednesday, May 11, 2011 12:56:25 PM

Work Order ID: 69487

Parent Item: D4030-041

Parent Item Name: Long Basket Assembly (350)

Start Date: 5/11/2011 **Required Date:** 5/13/2011

Start Qty: 1.00 **Required Qty:** 1.00

MS24665-151	Purchased	No	100	Each	483.0000	3	3	SP
Cotter Pin								

Location	Loc Qty	Loc Code	
ST309	483		
17566	483		3

MS24665-300	Purchased	No	100	Each	80.0000	2	2	SP
Cotter Pin								

Location	Loc Qty	Loc Code	
ST309	80		
116823	80		2

NAS1149F0432P	Purchased	No	100	Each	474.0000	6	6	SP
Washer								

Location	Loc Qty	Loc Code	
ST275	474		
117291	474		6

NAS1149F0563P	Purchased	No	100	Each	48.0000	4	4	SP
Washer								

Location	Loc Qty	Loc Code	
ST275	48		
114576	48		4

NAS1149F0332P	Purchased	No	100	Each	100.0000	8	8	11/6/7 SP
WASHER								

Location	Loc Qty	Loc Code	
ST275	100		
17317	100		8

Dart Aerospace Ltd

W/O:		WORK ORDER CHANGES					
DATE	STEP	PROCEDURE CHANGE	By	Date	Qty	Approval Chief Eng / Prod Mgr	Approval QC Inspector

Part No: _____ **PAR #:** _____ **Fault Category:** _____ **NCR:** Yes No **DQA:** _____ **Date:** _____

Resolution: _____ **Disposition:** _____ **QA: N/C Closed:** _____ **Date:** _____

NCR:		WORK ORDER NON-CONFORMANCE (NCR)						
DATE	STEP	Description of NC Section A	Corrective Action Section B			Verification Section C	Approval Chief Eng	Approval QC Inspector
			Initial Chief Eng	Action Description Chief Eng	Sign & Date			

NOTE: Date & initial all entries

H:\fFORMS\Quality Assurance\approved QA\NCRWO RevE

Picklist Print

Wednesday, May 11, 2011 12:56:25 PM

Work Order ID: 69487

Parent Item: D4030-041

Parent Item Name: Long Basket Assembly (350)

Start Date: 5/11/2011 **Required Date:** 5/13/2011

Start Qty: 1.00 **Required Qty:** 1.00

NAS1149C0432R	Purchased	No	100	Each	6,274.000	2	2	11/6/2 SP

Washer

Location	Loc Qty	Loc Code	
ST297	6274		
116900	1274		2
117291	5000		

Dart Aerospace Ltd

W/O:		WORK ORDER CHANGES					
DATE	STEP	PROCEDURE CHANGE	By	Date	Qty	Approval Chief Eng / Prod Mgr	Approval QC Inspector

Part No: _____ **PAR #:** _____ **Fault Category:** _____ **NCR:** Yes No **DQA:** _____ **Date:** _____

Resolution: _____ **Disposition:** _____ **QA: N/C Closed:** _____ **Date:** _____

NCR:		WORK ORDER NON-CONFORMANCE (NCR)						
DATE	STEP	Description of NC Section A	Corrective Action Section B			Verification Section C	Approval Chief Eng	Approval QC Inspector
			Initial Chief Eng	Action Description Chief Eng	Sign & Date			

NOTE: Date & initial all entries

SHOP COPY
RETURN TO
ENGINEERING

UNCONTROLLED COPY
SUBJECT TO AMENDMENT
WITHOUT NOTICE

WORK ORDER
NO. 69487
2011-05-11

ITEM	QTY -041	QTY -043	P/N	DESCRIPTION
	X		D4030-041	LONG BASKET ASSY (350)
		X	D4030-043	LONG BASKET ASSY, LIGHT LID (350)
1	1	1	D2530	HANDLE WELDMENT
2	2	2	D2535	SPRING
3	2	2	D2537	BUSHING
4	1	1	D3913-041	LONG BASKET BASE ASSY (350)
5	1		D3914-041	LONG BASKET LID ASSY (350)
6		1	D3915-041	LIGHT LID ASSY-LONG BASKET
7	6	6	D3917-3	WASHER
8	2	2	D3953-3	GAS SPRING STUD, LID
9	2	2	D3953-7	GAS SPRING SPACER
10	2	2	D3953-9	GAS SPRING WASHER
11	2	2	D3953-17	GAS SPRING SPACER
12	1	1	D3953-19	GAS SPRING BRACKET
13	1	1	D3953-21	GAS SPRING BRACKET
14	1	1	D3969-3	SPRING
15	4	4	AN3-14A	BOLT
16	2		AN3-16A	BOLT
17		2	AN3-20A	BOLT
18	3	3	AN4-12	BOLT (DRILLED)
19	4	2	AN5-17A	BOLT
20		2	AN5-21A	BOLT
21	3	3	AN310-4	NUT, CASTELLATED
22	2	2	AN310C4	NUT, CASTELLATED
23	6	6	MS21042L3	NUT
24	4	4	MS21042L5	NUT
25	3	3	MS24665-151	COTTER PIN
26	2	2	MS24665-300	COTTER PIN
27	6	6	NAS1149F0432P	WASHER
28	4	4	NAS1149F0563P	WASHER
30	8	8	NAS1149F0332P	WASHER
31	2	2	NAS1149C0432R	WASHER

C

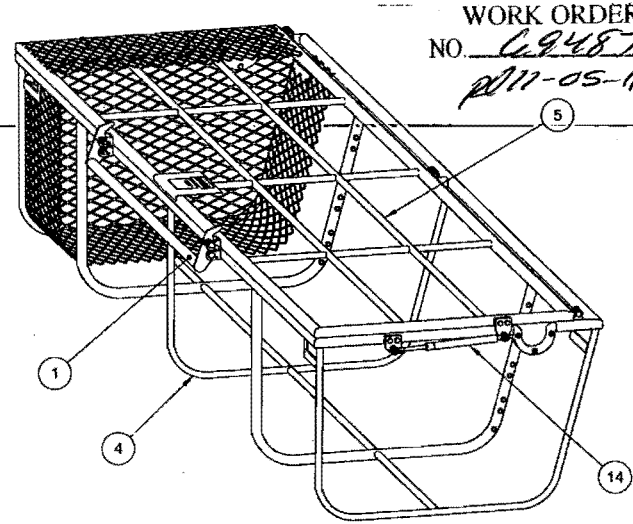

D4030-041 LONG BASKET ASSY (350)
(MESH SHOWN LOCALLY FOR CLARITY)

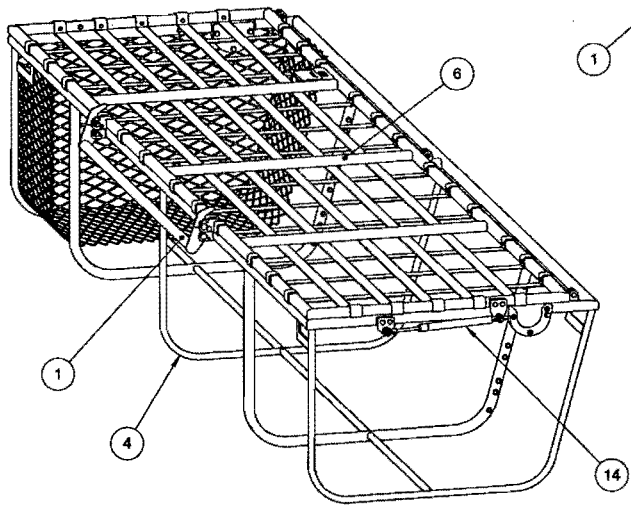

D4030-043 LONG BASKET ASSY, LIGHT LID (350)
(MESH SHOWN LOCALLY FOR CLARITY)

RELEASED
10.08.12
ECN 10-596

NOTES:
1) MATERIAL: N/A
2) FINISH: NONE
3) TOLERANCES: PER DART QSI 018 UNLESS OTHERWISE NOTED
4) UNITS: INCHES UNLESS OTHERWISE NOTED
5) BREAK SHARP EDGES: N/A
6) IDENTIFICATION: N/A
7) WEIGHT: -041: 72 lbs APPROX
-043: 57 lbs APPROX

REV.	DESCRIPTION	BY	DATE
C	QTY FOR ITEMS #30 & #31 UNDER -043 WERE MISSING (B8-1); QTY FOR ITEM #3 WAS 4 (D6-1), ONLY 2 ARE REQUIRED, AFFECTS SECTION C-C (D3-3).	MB	10.07.23
B	AN5-21A BOLT WAS AN5-19A: BOM & (D3-3)	JPH	10.04.06
A	NEW ISSUE	JPH	10.03.16

DESIGN	AJS	DART AEROSPACE LTD HAWKESBURY, ONTARIO, CANADA
DRAWN		
CHECKED		DRAWING NO. D4030 — REV. C — SHEET 1 OF 3
MFG. APPR.	JFS	
APPROVED		TITLE: LONG BASKET ASSY (350) — SCALE: NTS
DE APPR.		
DATE	10.07.23	

COPYRIGHT © 2010 BY DART AEROSPACE LTD
THIS DOCUMENT IS PRIVATE AND CONFIDENTIAL AND IS SUPPLIED ON THE EXPRESS CONDITION THAT IT IS NOT TO BE USED FOR ANY PURPOSE OR COPIED OR COMMUNICATED TO ANY OTHER PERSON WITHOUT WRITTEN PERMISSION FROM DART AEROSPACE LTD.

Dart Aerospace Ltd

W/O:		WORK ORDER CHANGES					
DATE	STEP	PROCEDURE CHANGE	By	Date	Qty	Approval Chief Eng / Prod Mgr	Approval QC Inspector

Part No: _____ **PAR #:** _____ **Fault Category:** _____ **NCR:** Yes No **DQA:** _____ **Date:** _____

Resolution: _____ **Disposition:** _____ **QA: N/C Closed:** _____ **Date:** _____

NCR:		WORK ORDER NON-CONFORMANCE (NCR)						
DATE	STEP	Description of NC Section A	Corrective Action Section B			Verification Section C	Approval Chief Eng	Approval QC Inspector
			Initial Chief Eng	Action Description Chief Eng	Sign & Date			

NOTE: Date & initial all entries

H:\fFORMS\Quality Assurance\approved QA\NCRWO RevE

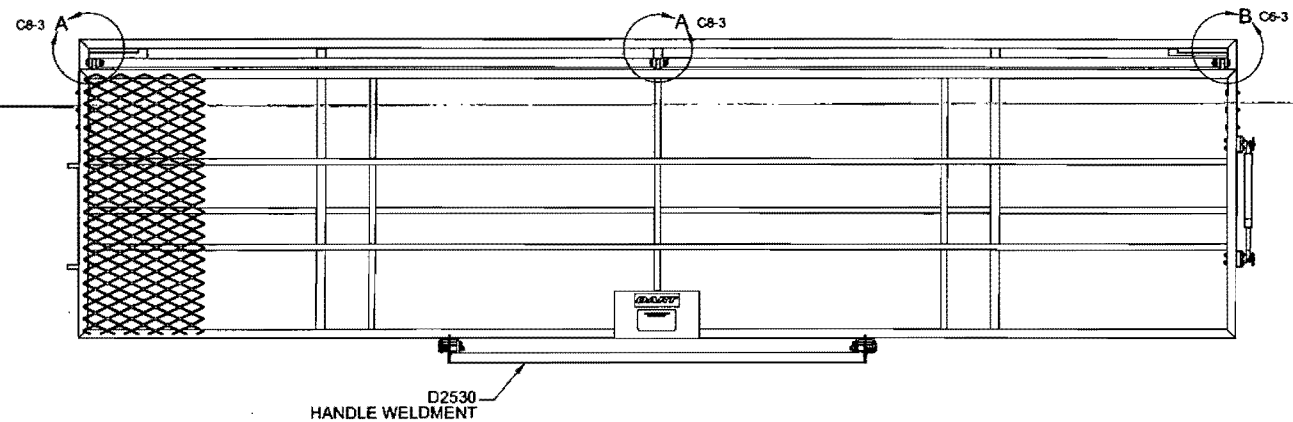

w/o 69487

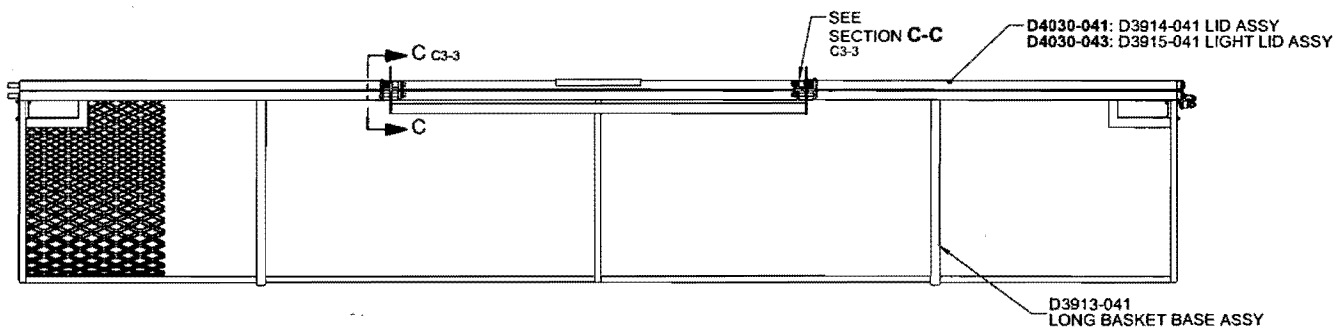

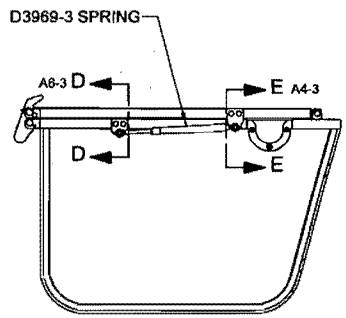

D4030-041 LONG BASKET ASSY (350) (SHOWN)
(MESH SHOWN LOCALLY OR REMOVED FOR CLARITY)

D4030-043 SHORT BASKET ASSY, LIGHT LID (350)
(MESH SHOWN LOCALLY FOR CLARITY)

RELEASED 10.08.27 CP

DESIGN	A.S	**DART AEROSPACE LTD** HAWKESBURY, ONTARIO, CANADA
DRAWN		
CHECKED		DRAWING NO. D4030 — REV. C — SHEET 2 OF 3
MFG. APPR.		
APPROVED		TITLE LONG BASKET ASSY (350) — SCALE NTS
DE APPR.		
DATE	10.07.23	

COPYRIGHT © 2010 BY DART AEROSPACE LTD
THIS DOCUMENT IS PRIVATE AND CONFIDENTIAL AND IS SUPPLIED ON THE EXPRESS CONDITION THAT IT IS NOT TO BE USED FOR ANY PURPOSE OR COPIED OR COMMUNICATED TO ANY OTHER PERSON WITHOUT WRITTEN PERMISSION FROM DART AEROSPACE LTD.

Dart Aerospace Ltd

W/O:		WORK ORDER CHANGES					
DATE	STEP	PROCEDURE CHANGE	By	Date	Qty	Approval Chief Eng / Prod Mgr	Approval QC Inspector

Part No: _____ **PAR #:** _____ **Fault Category:** _____ **NCR:** Yes No **DQA:** _____ **Date:** _____

Resolution: _____ **Disposition:** _____ **QA: N/C Closed:** _____ **Date:** _____

NCR:		WORK ORDER NON-CONFORMANCE (NCR)						
DATE	STEP	Description of NC Section A	Corrective Action Section B			Verification Section C	Approval Chief Eng	Approval QC Inspector
			Initial Chief Eng	Action Description Chief Eng	Sign & Date			

NOTE: Date & initial all entries

H:\fFORMS\Quality Assurance\approved QA\NCRWO RevE

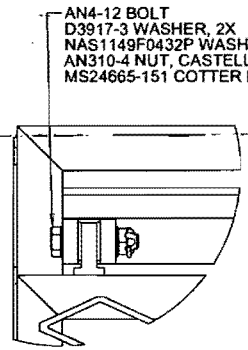

DETAIL A D8-2 D5-2

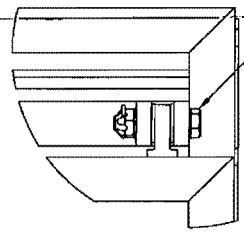

DETAIL B D3-2

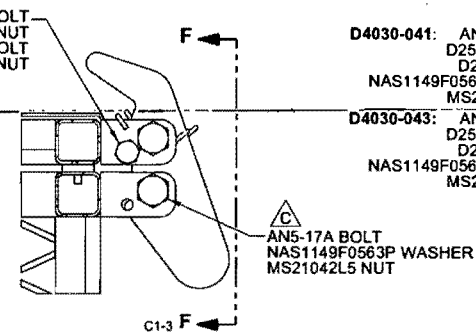

SECTION C-C B4-2 B6-2

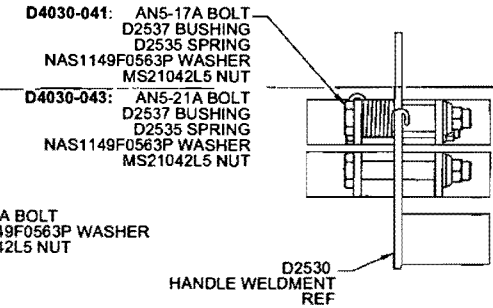

VIEW F-F C3-3

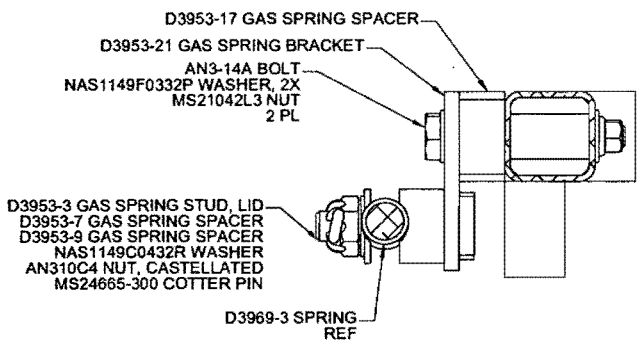

SECTION D-D B2-2

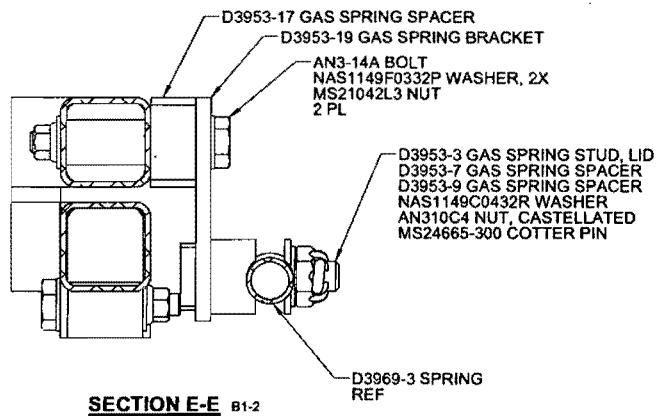

SECTION E-E B1-2

u/o 68487

RELEASED 10.08.12

DESIGN	A.J.S	**DART AEROSPACE LTD** HAWKESBURY, ONTARIO, CANADA
DRAWN		
CHECKED		DRAWING NO. D4030 — REV. C — SHEET 3 OF 3
MFG. APPR.	T.F.S	
APPROVED		TITLE: LONG BASKET ASSY (350) — SCALE: NTS
DE APPR.		
DATE	10.07.23	

COPYRIGHT © 2010 BY DART AEROSPACE LTD
THIS DOCUMENT IS PRIVATE AND CONFIDENTIAL AND IS SUPPLIED ON THE EXPRESS CONDITION THAT IT IS NOT TO BE USED FOR ANY PURPOSE OR COPIED OR COMMUNICATED TO ANY OTHER PERSON WITHOUT WRITTEN PERMISSION FROM DART AEROSPACE LTD

Dart Aerospace Ltd

W/O:		WORK ORDER CHANGES					
DATE	STEP	PROCEDURE CHANGE	By	Date	Qty	Approval Chief Eng / Prod Mgr	Approval QC Inspector

Part No: _____ PAR #: _____ Fault Category: _____ NCR: Yes No DQA: _____ Date: _____

Resolution: _____ Disposition: _____ QA: N/C Closed: _____ Date: _____

NCR:		WORK ORDER NON-CONFORMANCE (NCR)						
DATE	STEP	Description of NC Section A	Corrective Action Section B			Verification Section C	Approval Chief Eng	Approval QC Inspector
			Initial Chief Eng	Action Description Chief Eng	Sign & Date			

NOTE: Date & initial all entries

H:\fFORMS\Quality Assurance\approved QA\NCRWO RevE